RADIANT
ARCHITECTURAL LIGHTING

Water Effect In-ceiling RAD 180 FP IP 20

Interior DMX controlled, dynamic LED effect lighting system

63 mm deep luminaire.

Remote driver(s)

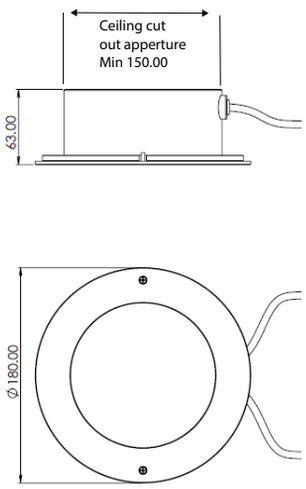

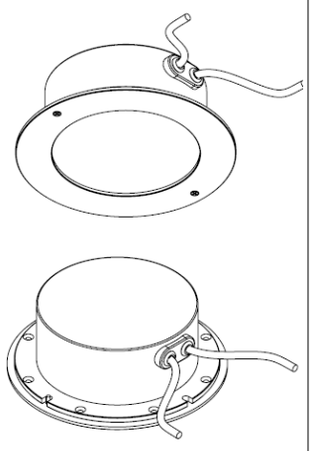

Water Effect RAD 180 FP IP 20 Ceiling mounted.

The Water Effect RAD 180 FP IP 20 Ceiling mounted system is designed to produce customisable, decorative, dynamic lit-effects from a compact and discreet luminaire.

Product description:

Each luminaire incorporates a 12 x 1.5 Watt Cree XPE / XPG LED light engine and a textured glass panel optic. These can all be customised to create decorative, dynamic lit-effects tailored to suit project requirements.

Up to 8 DMX channels create overlapping dimming sequences so that the light output from the LEDs projects through rippled or stippled glass giving a range of effects including light reflecting on moving water / fire effect.

The system does not rely on any moving parts and the LEDs are not run at full power for most of the dimming sequence, giving a long working life of up to 100,000 hours.

Each luminiare can be run at up to 20 Watts, providing up to 1,300 lumens, depending on the mix of LED colours and colour temperatures and the textured glass used. The lumen output varies during the dimming sequences.

Remote DMX driver kit with integral DMX memory and pre loaded dimming sequences.

Various LED colours, colour temperatures and CRI options available. The colour / CCT of each LED can be specified.

Ingress Protection IP20.

Vandal resistant polycarbonate window.

Up to 1,300 Lumens per fixture

Product Code	IP	LED Type	LED Colour or white LED Colour Temp.(K)		CRI	Window	Optics	Bezel finish	
WATER EFFECT IN-CEILING RAD 180 FP IP 20 REMOTE DRIVER	20	CREE: 12x Cree XPE / XPG LED LEDs - custom combinations or white or colour LEDs can be specified	Specify colour / colour temp. for each of the 12 LEDs in the LED cluster array:		70 80 90	Clear polycarbonate	Textured glass: Rippled Stippled	Aluminium Powder coated Brushed	Powder coat finish: Black White Any RAL colour
			Far Red, Deep Red, Red, Red-Orange, Amber, PC Amber, Mint, Lime, Green, Cyan, Blue, Royal Blue, Violet	22=2,200k 27=2,700k 30=3,000k 35=3,500k 40=4,000k 50=5,000k 57=5,700k 65=6,500k					

Radiant Architectural Lighting
10 Broadbent Close
20 - 22 Highgate High Street
London N6 5JW
ENGLAND UK

T: + 44 (0) 20 8348 9003
F: + 44 (0) 20 8348 6478
E: david@radiantlights.co.uk
www.radiantlights.co.uk

EN 60598 CE
The information in this document is provided without liability and subject to change without notice

REV1

Products and literature designed by
DAVID MORGAN ASSOCIATES